Bloc

Flex

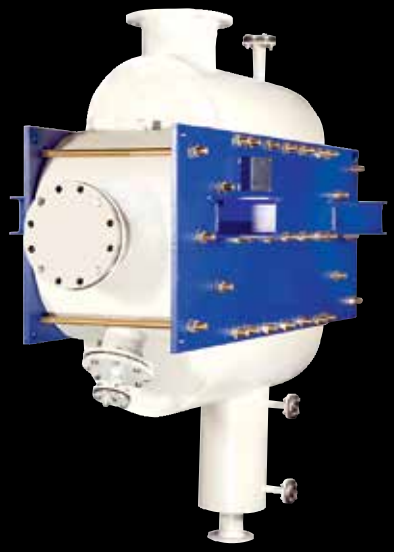

REKULUVO

Our fully-welded plate heat exchangers make a convincing case due to their minimal size, outstanding thermal transmission coefficients and comparatively minimal investment costs. They are particularly robust and require only minimal cleaning and servicing. The design advantages thus come into play in areas in which in addition to the output, load capacity is also required. In addition, each series has its specific advantages and areas of application. The conclusion: Developed for the challenges of specific applications, the EcoWeld product line offers convincing performance even under the most difficult circumstances.

Fully welded plate heat exchangers

FOCUSED ON THE MOST STRINGENT REQUIREMENTS

Overview of the fully welded plate heat exchangers

	Bloc	**Flex**	**REKULUVO/ REKUGAVO**
Maximum temperature	350 °C	900 °C	700 °C
Maximum pressure	35 bar	60 bar	1,4 bar (max. 0,4 Diff.)
Area	1-860 m²	1-12.000 m²	500-250.000 m²
Maximum volume flow	10.000 m³/h	15.000 m³/h	variable

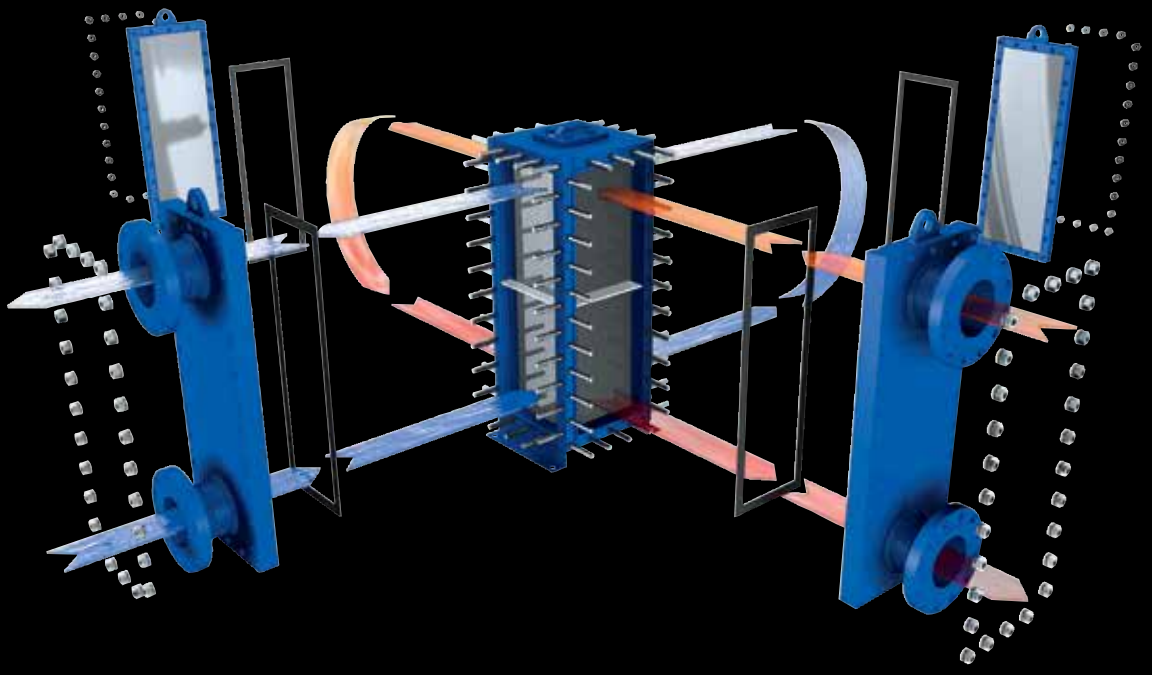

Two different plate corrugations
The compact, fully-welded heat exchanger can be equipped with two different plate corrugations, as required by their application. The chevron corrugation assures highly efficient heat transfer, the double-dimple corrugation is most suited to demanding media with high viscosity or for vacuum condensation.

Bloc

FULLY WELDED FOR OIL AND GAS AS WELL AS PETROCHEMICALS

Kelvion's Bloc is a fully-welded plate heat exchanger that is used above all in the oil and gas industry, the chemical industry as well as in the petrochemical sector. The solidly bolted frame consists of four columns, top and bottom plates as well as four side plates. These can be detached swiftly and allow free access all the way around for the thorough and easy cleaning of the fully-welded plate packages. Two different plate corrugations are available. Chevron corrugation enables effective heat transfer. In contrast, dimple corrugation is the first choice for highly viscous media.

Their advantages at a glance

- Fully welded plate heat exchanger package
- for applications at temperatures up to 350 °C and pressures up to 35 bar
- small footprint and low installation cost
- Access to both sides of the media
- easy cleaning thanks to unproblematic opening of the apparatus

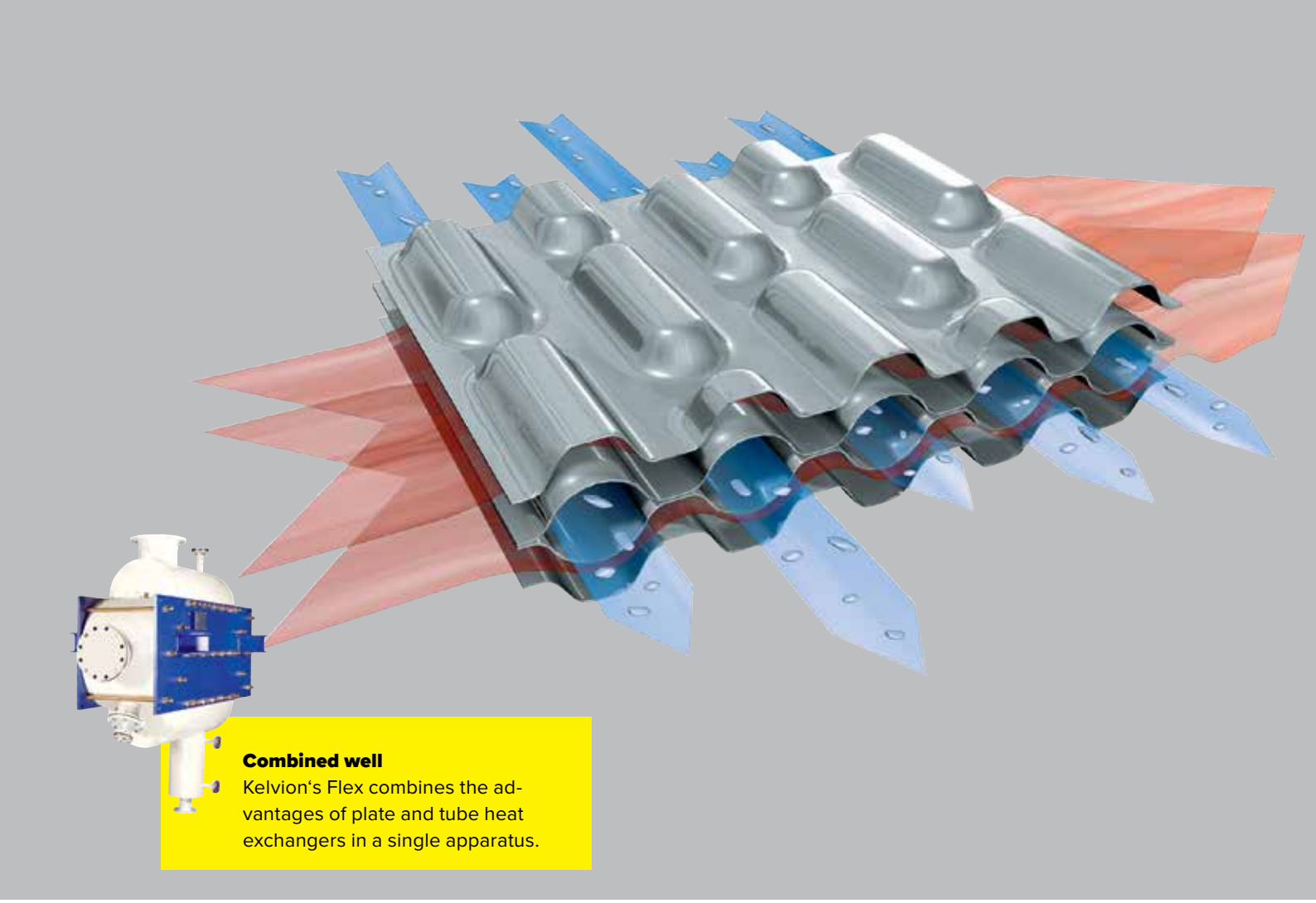

Combined well
Kelvion's Flex combines the advantages of plate and tube heat exchangers in a single apparatus.

Flex

FULLY WELDED FOR MULTIPLE APPLICATIONS

Kelvion's Flex combines the advantages of shell-and-tube and plate heat exchangers in a single apparatus. This makes it predestined for the most varied applications: e.g. as a condenser in the power station sector, as a plate-type falling-film evaporator in the sugar industry, as a condenser, evaporator and heat exchanger for the thermal treatment of 2-phase mixtures in the chemical and petrochemical industries as well as in the oil and gas industry.

Thanks to its customisable design it is equally successful when used as a head condenser. The plate structure enables a high output density. Efficient, turbulent heat transfer is already possible at minimal temperature differentials and varying volume flows. Even in the case of a large volume flow, the loss of pressure at the tube is minimal. In comparison with previous solutions, the effort involved in cleaning is clearly reduced.

Their advantages at a glance

- media containing fibres and solids can be used at the tube-side with a large, open flow area
- high condensation outputs up to 200 MW and condensate supercooling in a single apparatus
- operation in a vacuum with minimal pressure losses
- variable temperature limits up to 900 °C
- variable pressure limits up to 60 bar as well as high pressure differentials between media

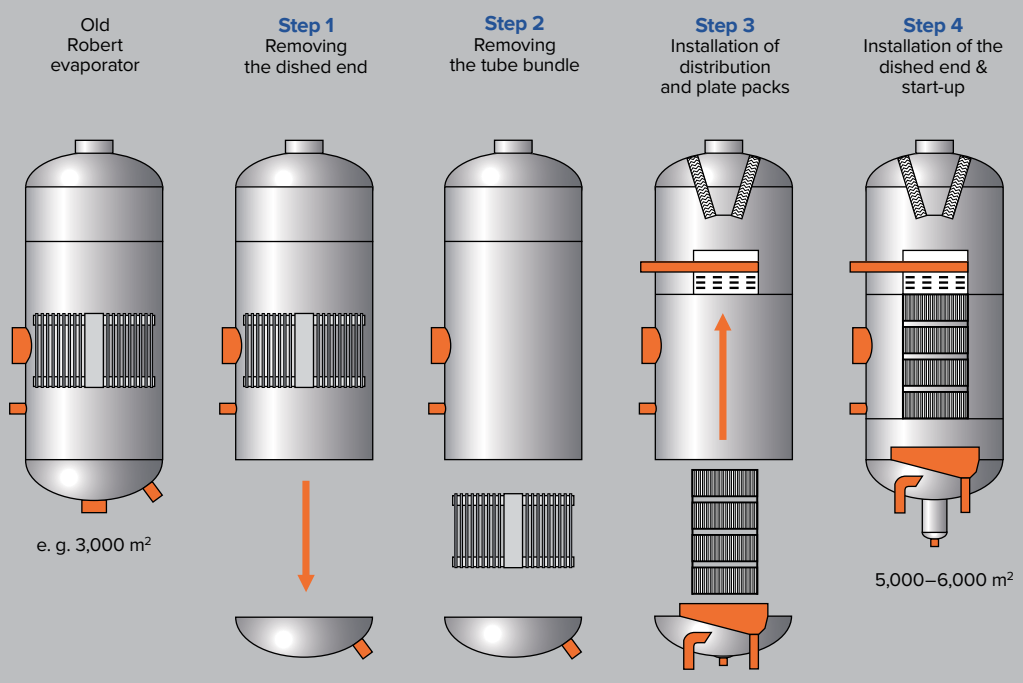

A gentle high-performance evaporator
Outstanding thermodynamic characteristics enable energy-saving designs. The design aimed at efficiency simultaneously assures gentle handling of the sugar syrup by means of low temperature differentials and short dwell times.

EvapPlus

AS EVAPORATOR IN THE SUGAR-INDUSTRY

As gentle product handling and energy saving are at the forefront in sugar production, the EVAPplus plate-type falling film evaporator is precisely the right solution. The most modern technology ensures the highly efficient concentration of sugar beet and sugar cane syrup. The advantages of the EVAPplus can also be applied to the subsequent output increase of existing Robert evaporators. Alterations to buildings, foundations or to the statics of the plant are usually not required in doing so. The heating coil is simply removed from the Robert evaporator and replaced with a EVAPplus plate package with a manifold. The heating surface and the efficiency of the system is thus considerably improved with minimal cost.

Their advantages at a glance

- highest heat transfer rates
- minimal temperature differentials
- short dwell time of the syrup in the apparatus
- high heating surface density
- minimal syrup discolouration

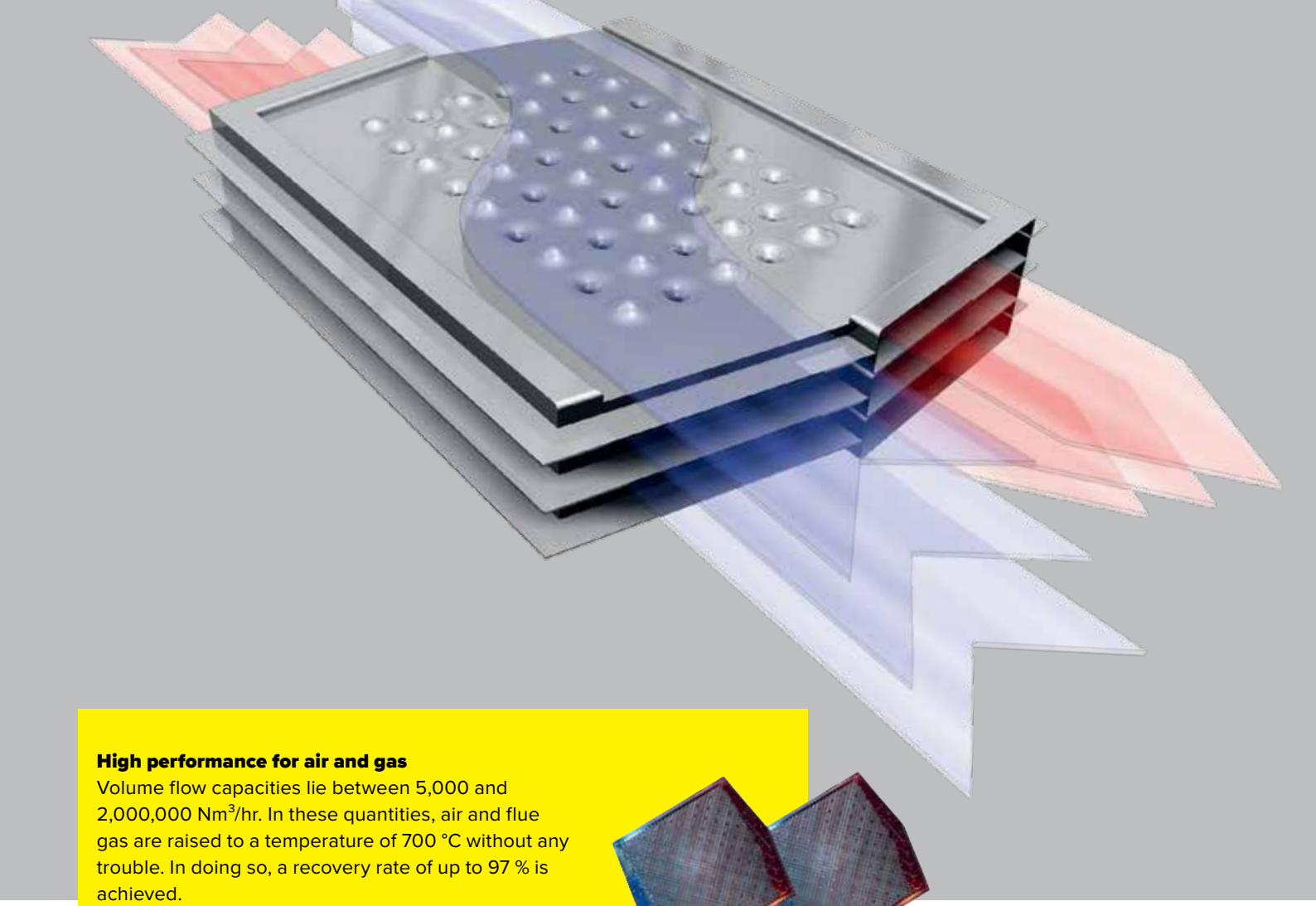

High performance for air and gas
Volume flow capacities lie between 5,000 and 2,000,000 Nm^3/hr. In these quantities, air and flue gas are raised to a temperature of 700 °C without any trouble. In doing so, a recovery rate of up to 97 % is achieved.

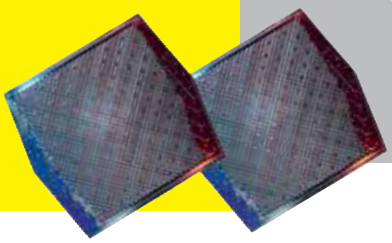

REKULUVO®/REKUGAVO®

FULLY WELDED – HIGH PERFORMANCE FOR AIR AND GAS

Our REKULUVO/REKUGAVO exhaust gas heat exchangers have been specially developed for applications with gaseous media containing pollutants. They are used in thermal power stations, ammonia and methanol factories as well as in environmental technology. Wherever especially high-performance exhaust air or exhaust gas heat exchangers are required, our EKULUVO/REKUGAVO can be used; for example to preheat sucked-in combustion air or to heat flue gases to the reaction temperature of a catalyst.. By means of the counterflow principle, the REKULUVO/REKUGAVO achieves an exceptionally high efficiency of up to 97 %.

Their advantages at a glance

- media containing fibres and solids can be used at the tube side with a large, open flow area
- high condensation outputs up to 200 MW and condensate supercooling in a single apparatus
- operation in a vacuum with minimal pressure losses
- variable temperature limits up to 900 °C
- variable pressure limits up to 60 bar as well as high pressure differentials between media